LED line LITE

Code: 248283

EAN: 5901583248283

LED bulb SMD 2700K 7W 550lm 230V 110° INSERT fi50mm DIM Ceramics LITE



LED line bulb LITE SMD 7W 2700K with light stream 550 lm is a modern and energy-efficient light source. With the power of 7 W, it achieves a capacity of 79 lm/W, emitting a warm white light at a colour temperature of 2700 K. The product has a lifespan of up to 30,000 hours and a lighting angle of 110°, which ensures a uniform scattering of light.

Technical data

Parameter	Value
Energy efficiency class 2019/2015	G
Warranty	3
Power	• 7 W
Voltage	• 220-260 V AC
Correlated colour temperature	• 2700 K
Colour of the light	White
Colour rendering index Ra	80
Luminous efficacy	79
Luminous flux	550 lm
The lumen maintenance factor	96
Lifetime L70B50	30 000 h
Survival factor	0.9
Dimmable function	Triac
Colour consistency in McAdam ellipses	≤6

Parameter	Value
Frequency of the supply voltage	50/60Hz
Beam angle	110°
LED type	SMD2835
Compatible dimmer type	3-step
Power Factor	0,5
Number of on/off cycles	50000
Lamp's warm-up time to 60%	1
Ambient temperature suitable for operation	-20÷40
For indoor use	Inside
Height	36
Fixture's diameter	50 mm
Colour	white
Material (housing)	Ceramics
Material (cover)	glass

T: +48 29 764 77 00 export@ledline.pl **www.ledline.pl/en**

LED line LITE

Code: 248283

EAN: 5901583248283

LED bulb SMD 2700K 7W 550lm 230V 110° INSERT fi50mm DIM Ceramics LITE

Technical drawing

Light distribution

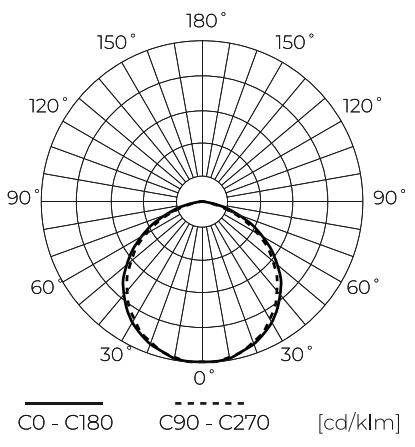

Additional product photos

Logistics data

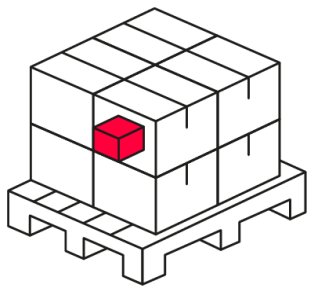

Single packaging

Quantity	1
Width	22 mm
Height	22 mm
Length	70,5 mm
Weight	0,08 kg

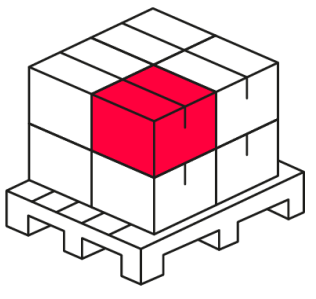

Bulk packaging

Quantity	100
Width	610 mm
Height	235 mm
Length	150 mm
Volume	0,021 m3
Weight	6 kg
Comments	

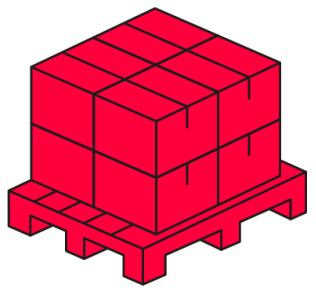

Europallet

Quantity	4500
Height	1950 mm
Quantity in layer	800
Number of layers	8
Bulk quantity	100
Weight	512 kg

T: +48 29 764 77 00 export@ledline.pl **www.ledline.pl/en**

LED line LITE

Code: 248283

EAN: 5901583248283

LED bulb SMD 2700K 7W 550lm 230V 110° INSERT fi50mm DIM Ceramics LITE

Example application

T: +48 29 764 77 00 export@ledline.pl **www.ledline.pl/en**