LED line PRIME

Code: 217096

EAN: 5905378217096

Stadium luminaire ESTADIO D:S 5000K 300W 51000lm 60° IP66 PRIME CRI80



Stadium fixtures **ESTADIO** are technologically advanced LED light sources designed for professional outdoor applications. They are ideal for illuminating stadiums, sports fields, maneuvering areas, ports, terminals, and other vast spaces requiring reliable and efficient lighting.

Product made to order. Lead time ~12 weeks.

5 WARRANTY | IP 66 | IK 10 | PF 0,95 | 100-277V AC | MAX -40÷45°C | CE

Technical data

Parameter	Value
Energy efficiency class 2019/2015	B
Warranty	5
Power	• 300 W
Voltage	• 100-277 V AC
Correlated colour temperature	• 5000 K
Colour of the light	White
IP protection rating	IP66
IK protection rating	10
IEC protection class	I
Luminous efficacy	170
Luminous flux	51000
The lumen maintenance factor	96
Lifetime L70B50	100 000 h
Colour consistency in McAdam ellipses	≤6

Parameter	Value
Frequency of the supply voltage	50/60Hz
CRI colour rendering index	80
Beam angle	60
LED type	EMC5050
LED quantity	100
Power Factor	0,95
Lamp's warm-up time to 60%	0,5
Ambient temperature suitable for operation	-40÷45
For indoor use	Outside
Height	150 mm
Material (housing)	Aluminium
Material (cover)	Polycarbonate
Side surface exposed to wind	0,053m2

T: +48 29 764 77 00 export@ledline.pl **www.ledline.pl/en**

LED line PRIME

Code: 217096

EAN: 5905378217096

Stadium luminaire ESTADIO D:S 5000K 300W 51000lm 60° IP66 PRIME CRI80

Technical drawing

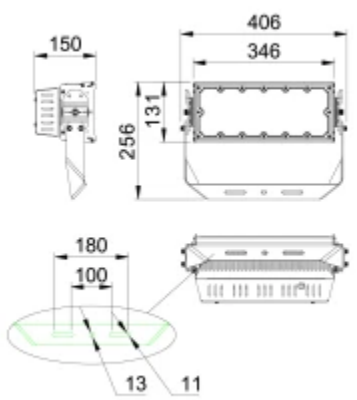

Light distribution

Additional product photos



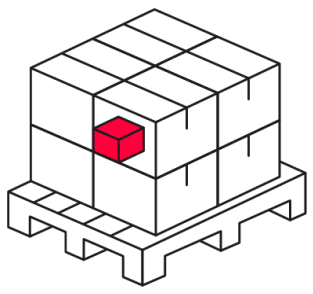

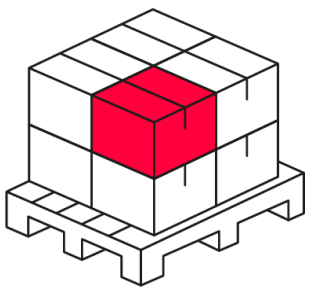

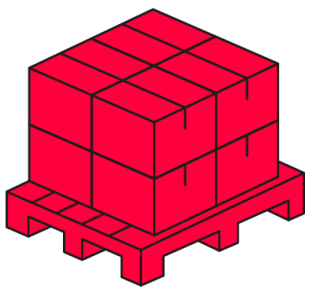

Logistics data

Single packaging

Quantity	1
Width	445 mm
Height	335 mm
Length	235 mm
Weight	5,7 kg

Bulk packaging

Quantity	1
Width	445 mm
Height	335 mm
Length	235 mm
Weight	5,7 kg

Europallet

Quantity	35
Height	1,9 m
Bulk quantity	1
Weight	250 kg

T: +48 29 764 77 00 export@ledline.pl **www.ledline.pl/en**

LED line PRIME

Code: 217096

EAN: 5905378217096

Stadium luminaire ESTADIO D:S 5000K 300W 51000lm 60° IP66 PRIME CRI80

Example application

T: +48 29 764 77 00 export@ledline.pl **www.ledline.pl/en**