LED line LITE

Code: 210103

EAN: 5905378210103

DOWNLIGHT EASY FLEX 3CCT(3K/4K/5K) 12/15/18W 1530lm square IP20 White LITE

Downlight EASY FLEX 18-21-24W CCT is a modern LED line LITE lighting luminaire, characterized by a luminous flux performance of 2110 lumens. It allows to choose colour temperature in the range 3000 K, 4000 K and 5000 K, which provides flexibility in space arrangement. IP20 seal class guarantees protection against solid bodies larger than 12 mm and the IK05 protection level provides impact resistance.

3 WARRANTY | IP 20 | IK 05 | PF 0,9 | 220-240V AC | MAX -20÷40°C | CE

Technical data

Parameter	Value
Energy efficiency class 2019/2015	E
Warranty	3
Power	• 12 W • 15 W • 18 W
Voltage	• 220-240 V AC
Correlated colour temperature	• 3000 K • 4000 K • 5000 K
Colour of the light	CCT
Colour rendering index Ra	80
IP protection rating	IP20
IK protection rating	05
IEC protection class	II
Luminous efficacy	90
Luminous flux	1530
The lumen maintenance factor	96
Lifetime L70B50	30 000 h

Parameter	Value
Colour consistency in McAdam ellipses	≤6
Frequency of the supply voltage	50/60Hz
Beam angle	120
LED type	SMD2835
LED quantity	168
Power Factor	>=0,9
Number of on/off cycles	15000
Lamp's warm-up time to 60%	1
Ambient temperature suitable for operation	-20÷40
Installation method	3in1 surface mounted, flush mounted, suspended
Mounting hole diameter	65-175
Height	17 mm
Colour	White

T: +48 29 764 77 00 export@ledline.pl **www.ledline.pl/en**

LED line LITE

Code: 210103

EAN: 5905378210103

DOWNLIGHT EASY FLEX 3CCT(3K/4K/5K) 12/15/18W 1530lm square IP20 White LITE

Technical drawing

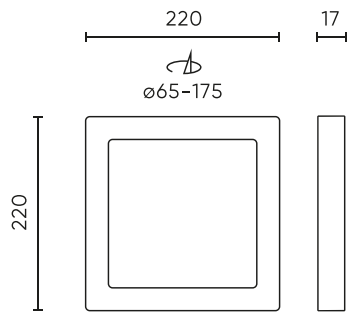

Light distribution

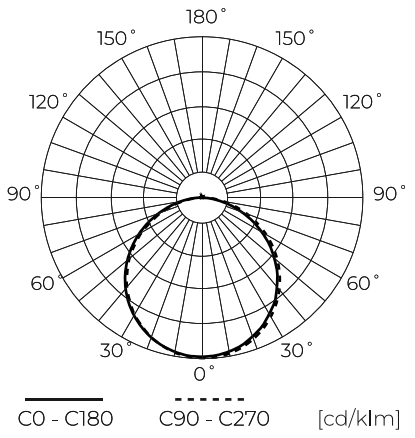

Additional product photos







Logistics data

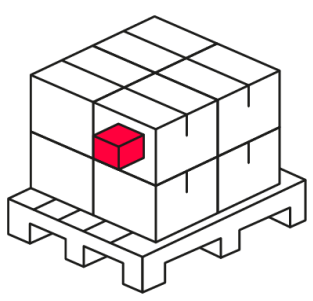

Single packaging

Width	225 mm
Height	58 mm
Length	225 mm
Weight	0,57 kg

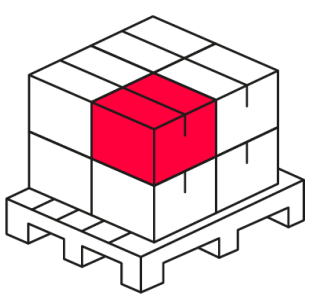

Bulk packaging

Quantity	20
Width	280 mm
Height	335 mm
Length	570 mm
Weight	11,40 kg

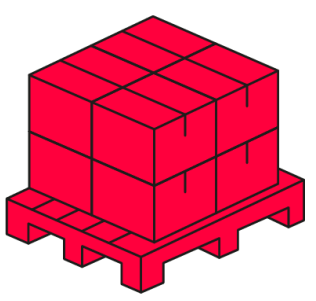

Europallet

Quantity	480
Height	1,8 m
Bulk quantity	20
Weight	300 kg

T: +48 29 764 77 00 export@ledline.pl **www.ledline.pl/en**

LED line LITE

Code: 210103

EAN: 5905378210103

DOWNLIGHT EASY FLEX 3CCT(3K/4K/5K) 12/15/18W 1530lm square IP20 White LITE

Example application

T: +48 29 764 77 00 export@ledline.pl **www.ledline.pl/en**