LED line LITE

Code: 231016

EAN: 5905378231016

LED strip 320 COB 24V 3000K 8W IP66 10mm 30m 760lm/m LITE

New

The new COB LITE LED strip series from LED line is the perfect combination of modern uniform lighting technology and an exceptionally affordable price. Designed for everyday domestic use, it completely eliminates the effect of visible light points, guaranteeing impeccable aesthetics. The availability of IP20 versions for dry interiors and IP66 versions with increased moisture resistance allows the strip to be perfectly matched to any project. In addition, a full 3-year manufacturer's warranty ensures peace of mind and the security of long-term use.

3 WARRANTY

Technical data

Parameter	Value
Energy efficiency class 2019/2015	F
Warranty	3
Power	• 8 W / m
Voltage	• 24 V DC
Correlated colour temperature	• 3000 K
Colour of the light	White
Colour rendering index Ra	90
IP protection rating	IP66
Cutting section	5 cm
Luminous efficacy	95
The lumen maintenance factor	96 %
Lifetime L70B50	30 000 h

Parameter	Value
Survival factor	0,9
Dimmable function	PWM
Colour consistency in McAdam ellipses	≤3
Maximum width of LED strip	10 mm
Luminous flux (1m)	760 lm
Current (1m)	0,33
Beam angle	180°
LED type	COB
LED quantity	320
Ambient temperature suitable for operation	-20÷45
Height	5 mm

T: +48 29 764 77 00 export@ledline.pl **www.ledline.pl/en**

LED line LITE

Code: 231016

EAN: 5905378231016

LED strip 320 COB 24V 3000K 8W IP66 10mm 30m 760lm/m LITE

Technical drawing

Light distribution

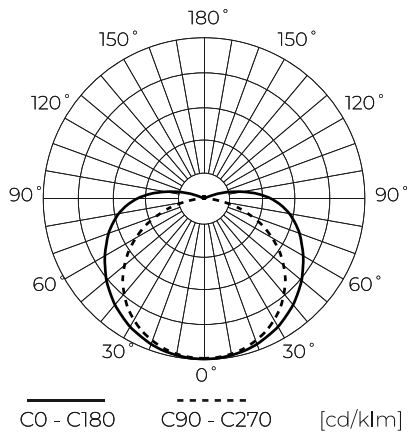

Additional product photos

Logistics data

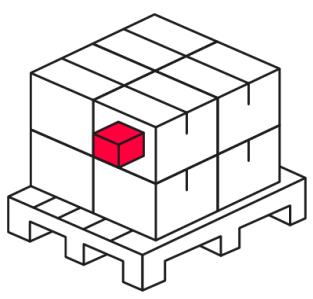

Single packaging

Width	500 mm
Height	16 mm
Length	540 mm
Weight	1,41 kg

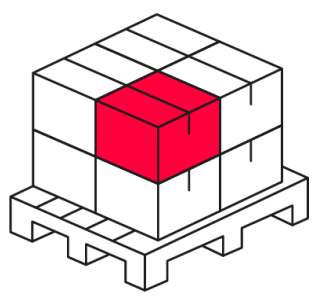

Bulk packaging

Quantity	20
Width	350 mm
Height	290 mm
Length	450 mm
Weight	29 kg

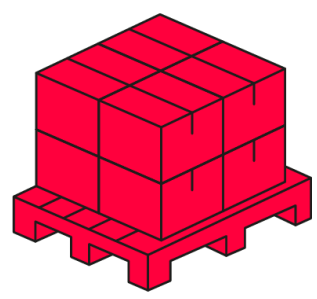

Europallet

Quantity	480
Height	1,8 m
Bulk quantity	24
Weight	700 kg

T: +48 29 764 77 00 export@ledline.pl **www.ledline.pl/en**

LED line LITE

Code: 231016

EAN: 5905378231016

LED strip 320 COB 24V 3000K 8W IP66 10mm 30m 760lm/m LITE

Example application

T: +48 29 764 77 00 export@ledline.pl **www.ledline.pl/en**