LED line PRIME

Code: 227347-LAW3HAT

EAN: 5905378231771

Downlight CALMOS 3CCT (3/4/6.5K) 18W 2100lm round IP54 White PRIME



The new LED line Downlight Calmos 3CCT is an ultra-flat fixture with a color temperature changing function, designed specifically for installation in low ceiling spaces. The external, replaceable power supply ensures optimal thermal conditions and allows for easy adaptation to lighting control systems. With an efficiency of 110lm/W and a 5-year warranty, it is a reliable choice for professionals looking for versatile and durable solutions.

IP 54

220-240V AC

Technical data

Parameter	Value
Energy efficiency class 2019/2015	C
Warranty	5
Power	• 18 W
Voltage	• 220-240 V AC
Correlated colour temperature	• 3000 K • 4000 K • 6500 K
Colour of the light	CCT
Colour rendering index Ra	80
IP protection rating	IP54
IK protection rating	03
IEC protection class	II
Luminous efficacy	115
Luminous flux	2100
Lifetime L70B50	50 000 h

Parameter	Value
L80B* – difference B10–B50 ≈ 1% (according to LightingEurope) – negligible	35000 h
Emergency module test	Autotest
Operating time in emergency mode	3 h
Frequency of the supply voltage	50/60Hz
Beam angle	110°
Power Factor	0,8
Ambient temperature suitable for operation	-20÷45
For indoor use	Inside
Height	40 mm
Fixture's diameter	145 mm
Colour	Biały
Material (housing)	Aluminium

T: +48 29 764 77 00 export@ledline.pl **www.ledline.pl/en**

LED line PRIME

Code: 227347-LAW3HAT

EAN: 5905378231771

Downlight CALMOS 3CCT (3/4/6.5K) 18W 2100lm round IP54 White PRIME

Technical drawing

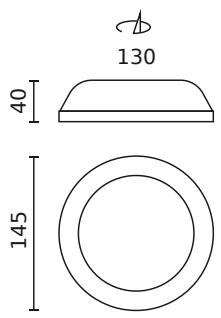

Light distribution

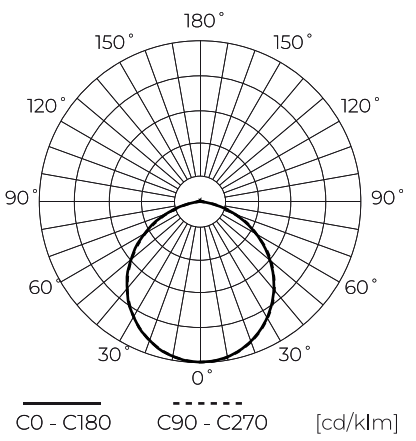

Additional product photos









Logistics data

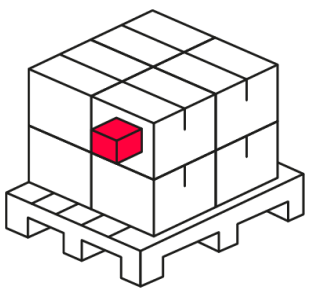

Single packaging

Width	50 mm
Height	162 mm
Length	150 mm
Weight	0,246 kg

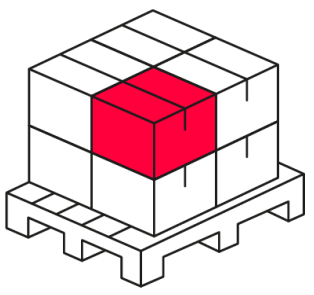

Bulk packaging

Quantity	60
Width	466 mm
Height	344 mm
Length	580 mm
Weight	15,5 kg

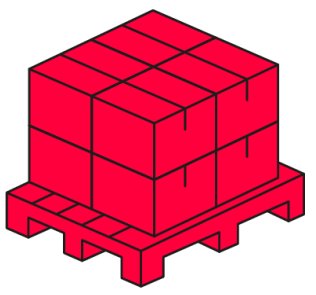

Europallet

Quantity	720
Height	1,8 m
Bulk quantity	60
Weight	230 kg

T: +48 29 764 77 00 export@ledline.pl **www.ledline.pl/en**

LED line PRIME Code: 227347-LAW3HAT EAN: 5905378231771

Downlight CALMOS 3CCT (3/4/6.5K) 18W 2100lm round IP54 White PRIME

Example application